Available online at www.sciencedirect.com
ScienceDirect
Optics Communications 275 (2007) 10–13
OPTICS COMMUNICATIONS
www.elsevier.com/locate/optcom

Incoherent convergence of diffraction free fields

Gabriel Martínez Niconoff *, J.C. Ramírez San Juan, J. Muñoz López, Patricia Martínez Vara

Instituto Nacional de Astrofísica, Óptica y Electrónica, INAOE, Departamento de Óptica, Grupo de Óptica Estadística, Apdo. Postal 51 y 216, C.P. 72000 Puebla, Pue., Mexico

Received 30 August 2006; received in revised form 26 February 2007; accepted 28 February 2007

Abstract

We describe a method for the synthesis of diffraction free fields by means of an ensemble of optical fields mutually incoherent. The constituent optical fields are generated by controlling the angular correlation function between two points distributed on a circle in the frequency space. The angular position and the separation between the points are considered as random variables. The implicit probability density function allows us to generate diffraction free beams with easily tunable profiles. Inverse problems are also analyzed, which consists in finding the joint probability density function for a known irradiance distribution. Experimental and computational results are shown.

1. Introduction

The diffraction free fields (DFF) [1] offer applications in many physical situations such as optical twisters, atom-ion trapping, as illuminating beams for the generation of surface plasmons, etc. [2,3]. In this sense, it is desirable to generate DFF with diverse profiles; this is what we want to study in the present contribution. The study presented here can be considered as a consequence of the ergodic theorem [4] that essentially establishes that the average of spatial fluctuations is equal to temporary averages for stationary optical fields. This allows us to analyze ensembles of optical fields using a set of transmittances with random features, generating a mutually incoherent irradiance superposition, which is detected with an additive detector.

It is a well known fact that coherent DFF can be represented as a superposition of plane waves, described by the angular spectrum model given by [5],

$$\phi(x,y,z) = \int\int_{-\infty}^{\infty} H(u,v)\delta(u^2+v^2-d^2)\exp \mathrm{i}2\pi(xu + yv + zp)\mathrm{d}u\mathrm{d}v, \quad (1)$$

where (u,v,p) represents the spatial frequencies, that must satisfy $u^2+v^2+p^2=\frac{1}{\lambda}^2$, and λ is the wavelength. The expression in the integral $H(u,v)\delta(u^2+v^2-d^2)$ represents a circle of radius "d" modulated by an arbitrary function $H(u,v)$ this representation is a sufficient condition for the synthesis of coherent DFF [1]. In the present paper, the optical fields under study are generated using a set of modulating functions $H_i(u,v)$ with random features. Each modulating function has associated an optical field characterized by an amplitude function and its corresponding irradiance distribution. Analyzing the mean for the irradiance superposition of all the optical fields associated to the set of modulating functions we have that the new optical field is a diffraction free field DFF. This is because its frequency representation remains on some regions of a circle, keeping the condition of being diffraction free fields [1]. This construction corresponds with an incoherent convergence, because we are performing an irradiance superposition and interference effects between the optical fields associated to different modulating functions are avoided.

* Corresponding author. Tel.: +52 222 2 47 20 40; fax: +52 222 2 47 29 40.
E-mail address: gmartin@Inaoep.mx (G.M. Niconoff).

0030-4018/$ - see front matter © 2007 Elsevier B.V. All rights reserved.
doi:10.1016/j.optcom.2007.02.044

For mathematical simplicity we transform Eq. (1) to cylindrical coordinates, taken the form

$$\phi(r,\theta,z) = \mathrm{e}^{\mathrm{i}\beta z}\sum_n J_n(2\pi rd)\mathrm{e}^{\mathrm{i}n\theta}\int H(\varphi)\mathrm{e}^{-\mathrm{i}n\varphi}\mathrm{d}\varphi, \tag{2}$$

where $\beta = 2\pi\sqrt{\frac{1}{\lambda^2} - d^2}$ and non relevant constants have been omitted. The irradiance distribution is given by

$$\begin{aligned} I_i(r,\theta) &= \sum_{n,m} J_n(2\pi rd)J_m(2\pi rd)\mathrm{e}^{\mathrm{i}\theta(n-m)} \\ &\quad\times \int\int H(\varphi)H^*(\varphi')\mathrm{e}^{-\mathrm{i}n\varphi}\mathrm{e}^{\mathrm{i}m\varphi'}\mathrm{d}\varphi\mathrm{d}\varphi' \\ &= \sum_{n,m} J_n(2\pi rd)\mathrm{e}^{\mathrm{i}\theta n}A_{nm}\sum_{n,m} J_m(2\pi rd)\mathrm{e}^{-\mathrm{i}\theta m}. \end{aligned} \tag{3}$$

It must be noted that the irradiance distribution is non-dependent on z coordinate. Some interesting cases can be identified. If the H function is a constant, the matrix elements are zero except A_{00} and the optical field corresponds with a zero-order Bessel beam. Another case is when the circle has an angular modulation given by $H_i(\varphi) = \mathrm{e}^{\mathrm{i}s\varphi}$ and the irradiance distribution corresponds with a Bessel function of order s: $I(p) = J_s^2(2\pi rd)$. The general case occurs when H is an arbitrary but deterministic function, which can be expressed as $H(\varphi) = \sum_s a_s\mathrm{e}^{\mathrm{i}s\varphi}$. For this case, the irradiance is represented as a sum of Bessel functions of integer order, whose representation can be expressed in the matrix form

$$\begin{aligned} I(r) &= (J_0(2\pi r), J_1(2\pi r)\mathrm{e}^{\mathrm{i}\theta}, \ldots, J_n(2\pi r)\mathrm{e}^{\mathrm{i}n\theta}\ldots) \\ &\quad\times \begin{pmatrix} |a_{00}|^2 & a_0a_1^* & a_0a_n^* \\ a_1a_0^* & |a_{11}|^2 & a_{1n} \\ & & \\ a_na_0^* & a_{n2} & |a_{nn}|^2 \end{pmatrix} \begin{pmatrix} J_0(2\pi r) \\ J_1(2\pi r)\mathrm{e}^{-\mathrm{i}\theta} \\ \\ J_n(2\pi r)\mathrm{e}^{-\mathrm{i}n\theta} \end{pmatrix}. \end{aligned} \tag{4}$$

The matrix elements satisfy the following equation: $a_q = \int\sum_s a_s\mathrm{e}^{\mathrm{i}s\varphi}\mathrm{e}^{-\mathrm{i}q\varphi}\mathrm{d}\phi$. Eq. (4) can be considered as the general expression for coherent diffracted free beam. The diagonal elements represent the energy associated with a Bessel function of integer order and the outer elements represents the energy transfer between Bessel functions of different orders.

2. Random ensemble of difracted free fields

As it was mentioned, we are interested in the synthesis of optical fields generated by means of an incoherent ensemble of DFF. This is obtained associating random features to the modulating function $H(u,v)$ as it is shown below. The new optical field is generated by means of the irradiance superposition of these random diffracted free beams. The probability density functions implicated in the treatment allow us to generate the desirable optical field with easily tunable profiles. The main idea is to generate an ensemble of mutually incoherent fields and to describe its irradiance average, which according to Eq. (3) takes the form

$$\begin{aligned} \langle I(p)\rangle &= \sum_{n,m} J_n(2\pi rd)J_m(2\pi rd)\mathrm{e}^{\mathrm{i}\theta(n-m)} \\ &\quad\times \int\int \langle H_i(\varphi)H_i^*(\varphi')\rangle\mathrm{e}^{-\mathrm{i}n\varphi}\mathrm{e}^{\mathrm{i}m\varphi'}\mathrm{d}\varphi\mathrm{d}\varphi', \end{aligned} \tag{5}$$

where the function $\langle H_i(\varphi)H_i'(\varphi')\rangle$ represents the angular correlation function and the sub-index represents an event of the set of random modulation functions. The value of the integral represents the angular correlation coefficient ρ_{nm}. The simplest case for the angular correlation function occurs when $\langle H_i(\varphi)H_i^*(\varphi')\rangle = C$, and the irradiance distribution is again proportional to a zero order Bessel beam

$$\langle I(p)\rangle = |A|^2\sum_{n=0} J_n^2(2\pi rd) = |A|^2\frac{1}{2}(1 + J_0^2(2\pi rd)). \tag{6}$$

3. Experimental implementation

A simple method to control the irradiance convergence described by Eq. (5) consists in selecting of two arbitrary coherent points on the frequency circle. A simple case occurs when the relative separation "a" between these two points is a constant but the angular position θ is a random variable. The implicit parameters are sketched in the experimental set up shown in Fig. 1.

The irradiance associated to the optical field for these pair of points is

$$I(x,y,\theta) = 2(1 + \cos(4\pi a(x\cos\theta + y\sin\theta))), \tag{7}$$

this expression correspond to the fringes associated with Young's experiment, the interference pattern is rotated an angle θ, which is the random variable with probability density function $\rho(\theta)$. The average irradiance distribution is given by

$$\langle I(x,y)\rangle = \int_0^{2\pi} 2(1 + \cos(4\pi a(x\cos\theta + y\sin\theta)))\rho(\theta)\mathrm{d}\theta. \tag{8}$$

The structure of $\rho(\theta)$ allows us to generate diffraction free beams with tunable profile. Some interesting cases can be identified. If the probability density function is uniform, the irradiance distribution is given by a zero order Bessel function $\langle I(x,y\rangle = \frac{1}{2}(1 + J_0(4\pi a\sqrt{x^2+y^2}))$, where $0 \leqslant a \leqslant d$. In Fig. 2a we show the computational simulation for the optical field for this case. The profiles for diffraction free fields can be extended if we consider now the angular position and the relative separation between points as a random variable with joint probability density function $\rho(a,\theta)$. For this case, the irradiance distribution is given by

$$\begin{aligned} \langle I(x,y)\rangle &= \int_0^{\mathrm{d}}\int_0^{2\pi} 2(1 + \cos(4\pi a(x\cos\theta + y\sin\theta))) \\ &\quad\times \rho(a,\theta)\mathrm{d}a\mathrm{d}\theta. \end{aligned} \tag{9}$$

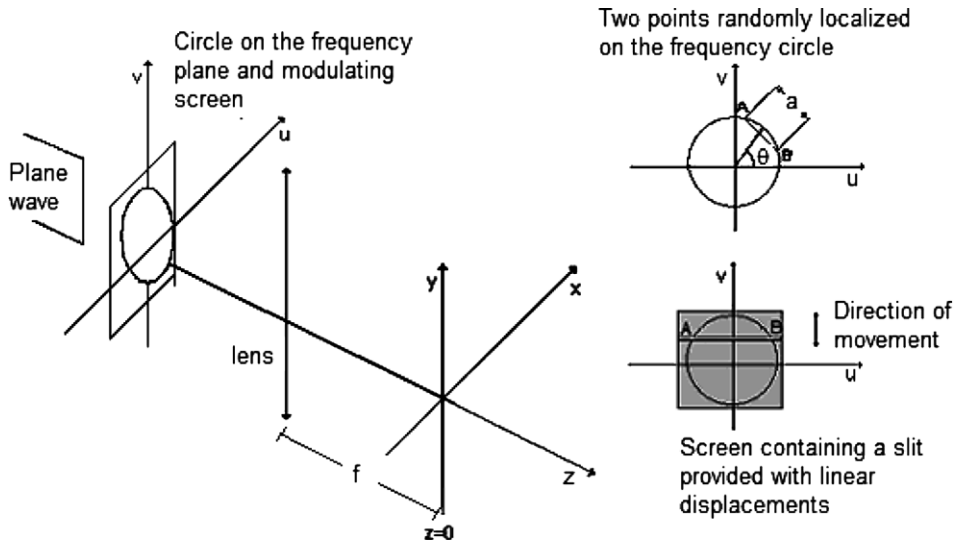

Fig. 1. Experimental set up and parameters for two points randomly localized on the frequency circle. The relative separation "a" and the angular positions θ are considered as random variables.

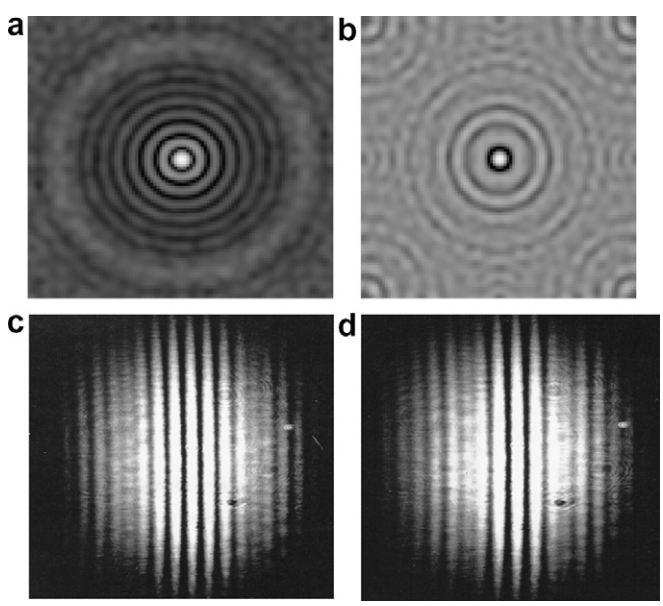

Fig. 2. In (a), computational results for an angular random variable with uniform probability density function. (b) Computational results for the case when angle and separation between points are random variables. The joint probability density function is uniform for both variables and they are considered as statistically independent. In (c) and (d), experimental results when the separation "a" between two points is a random variable with uniform probability density function in the range [4,6] and [1,6], respectively. The interval is in mm and the angle is constant. The radius of the ring is 3 mm approximately.

In Fig. 2b we show again the computational simulation for the irradiance distribution for the case when the random variables are statistically independent, i.e. $\rho(a,\theta) = A(a)\Theta(\theta)$ being each probability density function as uniform. The optical field for this case has the structure of a string beam. The experimental details for the synthesis of this optical field can be founded in [6]. Another interesting case is obtained when the angle θ is constant but the separation between points, "a", is a random variable. For this case, in Fig. 2c and d we show the experimental results for the irradiance average when $\rho(a)$ is uniform in two different intervals. To select these two points with random separation we superpose on the screen containing the ring a second screen containing a linear slit. The screen is mounted on a commercial linear motorized staged. The displacements are perpendicular to the z-axis as is shown in Fig. 1, being the minimum displacement of 0.1 mm. The random displacements were controlled with a personal computer PC and the irradiance was recorded using a CCD camera. The average was calculated numerically. From the experimental results we can appreciate that, when the interval of displacements is maximum, being equal to the diameter of the ring, the optical field tends to a "string beam" in the one-dimensional version. In the experiment, we generated 200 different optical fields associated to the randomly linear displacements of the slit.

4. Description of the probability density function

At this point, from Eq. (9), inverse problems can be identified. For a known irradiance distribution $\langle I(x,y)\rangle$, the problem consists in finding the joint probability density function $\rho(a,\theta)$. The solution is obtained from the Fredholm integral equation of the first kind given by Eq. (9), it can be rewritten in the following form

$$\langle I(x,y)\rangle = \int_0^d \int_0^{2\pi} \cos(4\pi a(x\cos\theta + y\sin\theta))\rho(a,\theta)\,\mathrm{d}a\mathrm{d}\theta, \tag{10}$$

The simplest cases occurs when the separation "a" is constant or when θ is constant. The corresponding integral equations are

$$\langle I(x,y)\rangle = \int_0^{2\pi} \cos(4\pi a(x\cos\theta + y\sin\theta))\rho(\theta)\,\mathrm{d}\theta,$$
$$\langle I(x)\rangle = \int_0^{\mathrm{d}} \cos(4\pi ax)\rho(a)\mathrm{d}a. \tag{11}$$

Considering the first integral equation and re-writing the kernel by means of the Jacobi–Anger expansion, we have

$$\langle I(x,y)\rangle = \sum_{n,m} J_n(2\pi ax)J_m(2\pi ay)\int_0^{2\pi} \mathrm{e}^{\mathrm{i}n\theta}\mathrm{e}^{\mathrm{i}m\theta}\rho(\theta)\mathrm{d}\theta$$
$$= \sum_{n,m} \rho_{nm}J_n(2\pi ax)J_m(2\pi ay), \tag{12}$$

where the ρ_{nm} coefficient satisfies $\rho_{nm} = \int_0^{2\pi} \mathrm{e}^{\mathrm{i}n\theta}\mathrm{e}^{\mathrm{i}m\theta}\rho(\theta)\mathrm{d}\theta$.

The kind of irradiance distributions that can be generated must be in the rank of the integral equation [7], and in this way, we have that the irradiance distributions must be represented as a Fourier Bessel series

$$\langle I(x,y)\rangle = \sum_{n,m} \alpha_{nm}J_n(4\pi ax)J_m(4\pi ay), \tag{13}$$

where the coefficients α_{nm} can be obtained by use of the orthogonally properties of the

$$\text{Bessel functions}: \alpha_{nm} = \frac{\int\int \langle I(x,y)\rangle J_n(4\pi ax)J_m(4\pi ay)\mathrm{d}x\mathrm{d}y}{\int\int J_n^2(4\pi ax)J_m^2(4\pi ay)\mathrm{d}x\mathrm{d}y}.$$

For a spatial stationary process, the probability density function must be periodic with period of 2π, and then it can be represented by a Fourier series $\rho(\theta) = \sum_s a_s \mathrm{e}^{\mathrm{i}s\theta}$. Then we have that the inverse problem reduces to find the a_s coefficients. Comparing terms we have that $\alpha_{nm} = \sum_s a_s \int_0^{2\pi} \mathrm{e}^{\mathrm{i}n\theta}\mathrm{e}^{\mathrm{i}m\theta}\mathrm{e}^{\mathrm{i}s\theta}\mathrm{d}\theta$. The last expression is always zero except when $s = -(n+m)$ and then it takes the 2π value.

In this way, the coefficients a_s of the probability density function are related to the irradiance coefficients, by $a_s = a_{-(m+n)} = \frac{1}{2\pi}\alpha_{nm}$. For the case when the relative separation "a" is a random variable, the inverse problem can be solved directly by means of a cosine transform of the irradiance distribution given by $\rho(a) = \int_{-\infty}^{\infty} \langle I(x)\rangle \cos(4\pi ax)\mathrm{d}x$, as can be deduced directly from the second equation in (11). As conclusion, we have described the synthesis of diffraction free beams by means of an irradiance superposition of random diffracted free beams mutually incoherent, where the average profile is obtained by controlling the joint probability density function. The constituent optical fields have an incoherent consonance in the phase function. For this reason, the treatment can be considered as the random version of the Lau effect [8,9]. This description can be extended almost without changes to generate optical fields that exhibit the self-imaging phenomenon, where the random points are distributed on the Montgomery rings [10–12].

Acknowledgement

This work was supported by CONACyT (Mexico) through Project Research 47325.

References

[1] J. Durnin, J. Opt. Am. A 4 (1987) 651.
[2] J. Arlt, V. Garces-Chavez, W. Sibbett, K. Dholakia, Opt. Commun. 197 (2001) 239.
[3] D.P. Rhodes, G.P.T. Lancaster, J. Livesey, D. Mcgloin, J. Arlt, K. Dholakia, Opt. Commun. 214 (2002) 247.
[4] M. Pollicot, M. Yuri, CUP (1998).
[5] L. Mandel, E. Wolf, Optical Coherence and Quantum Optics, Cambridge U Press, Cambridge, UK, 1995.
[6] Andrey S. Ostrovsky, Gabriel Martinez Niconoff, Julio C. Ramirez San Juan, Opt. Commun 195 (2001) 27.
[7] A.C. Pipkin, A Course on Integral Equations, Springer-Verlag, 1991.
[8] F. Gori, Opt. Commun. 31 (1979) 4.
[9] J. Jahns, A.W. Lohmann, Opt. Commun. 28 (1979) 263.
[10] W.D. Montgomery, J. Opt. Soc. Am. 57 (1967) 772.
[11] P. Szwaykoski, J. Ojeda-Castañeda, Opt. Commun. 83 (1991) 1.
[12] Gabriel Martinez Niconoff, J. Carranza-Gallardo, A. Cornejo Rodriguez, Opt. Commun. 111 (1994) 209.