Micro-hole drilling in thin films with cw low power lasers

J.C. Ramirez-San-Juan,[1] J.P. Padilla-Martinez,[1] P. Zaca-Moran, [2] and R. Ramos-Garcia[1,*]

[1]*Departamento de Optica, Instituto Nacional de Astrofisica, Optica y Electronica, Apartado Postal 51 y 216, 72000 Puebla, Pue. Mexico*
[2]*Laboratorio de Fisicoquimica de Materiales ICUAP-BUAP, 72050 Puebla Pue. Mexico*
**rgarcia@inaoep.mx*

Abstract: In this work, we perform drilling of micro-holes and micro-patterning in indium tin oxide (ITO) and titanium thin films. In ITO films the drilling is performed by thermocavitation only; meanwhile in titanium two competing processes are identified: (i) laser-induced sublimation producing high-quality micro-holes comparable to those produced with femtosecond pulses but at a reduced cost and (ii) erosion by thermocavitation which tend to degrade the quality of the micro-holes. The micro-holes can be employed as micrometer light sources for use in point-diffraction interferometers or spatial filters; in addition, micron-sized resolution patterning can be performed.

OCIS codes: (350.3390) Laser materials processing; (140.6810) Thermal effects; (350.1820) Damage; (230.4000) Microstructure fabrication; (240.3990) Micro-optical devices.

References and links

1. B. N. Chichkov, C. Momma, S. Nolte, F. Alvensleben, and A. Tünnermann, "Femtosecond, picosecond and nanosecond laser ablation of solids," Appl. Phys., A Mater. Sci. Process. **63**(2), 109–115 (1996).
2. C. E. Webb and J. D. Jones, Handbook of: Laser Technology and Applications IOP Publishing, England (2004).
3. S. Nolte, C. Momma, H. Jacobs, A. Tünnermann, B. N. Chichkov, B. Wellegehausen, and H. Welling, "Ablation of metals by ultrashort laser pulses," J. Opt. Soc. Am. B **14**(10), 2716–2722 (1997).
4. W. Kautek, J. Krüger, M. Lenzner, S. Sartania, C. Spielmann, and F. Krausz, "Laser ablation of dielectrics with pulse durations between 20 fs and 3 ps," Appl. Phys. Lett. **69**(21), 3146–3148 (1996).
5. R. Stewart and L. Li, "Enclosed laser ablation of 20 nm aluminium films using a continuous wave diode laser: II-Theorical heating considerations and proposed mechanisms," Opt. Laser Technol. **36**(5), 377–382 (2004).
6. Y. Tomita and A. Shima, "Mechanisms of impulsive pressure generation and damage pit formation by bubble collapse," J. Fluid Mech. **169**(-1), 535–564 (1986).
7. A. Philipp and W. Lauterborn, "Cavitation erosion by single laser-produced bubbles," J. Fluid Mech. **361**, 75–116 (1998).
8. C. A. Sacchi, "Laser-induced electric breakdown in water," J. Opt. Soc. Am. B **8**(2), 337–345 (1991).
9. P. A. Barnes and K. E. Rieckhoff, "Laser-induced underwater sparks," Appl. Phys. Lett. **13**(8), 282–284 (1968).
10. K.-T. Byun, H.-Y. Kwak, and S. W. Karng, "Bubble Evolution and Radiation Mechanism for Laser-Induced Collapsing Bubble in Water," Jpn. J. Appl. Phys. **43**(9A), 6364–6370 (2004).
11. J. C. Ramirez-San-Juan, E. Rodriguez-Aboytes, A. E. Martinez-Canton, O. Baldovino-Pantaleon, A. Robledo-Martinez, N. Korneev, and R. Ramos-Garcia, "Time-resolved analysis of cavitation induced by CW lasers in absorbing liquids," Opt. Express **18**(9), 8735–8742 (2010).
12. N. Korneev, P. R. Montero, R. Ramos-García, J. C. Ramirez-San-Juan, and J. P. Padilla-Martinez, "Ultrasound induced by CW laser cavitation bubbles," J. Phys.: Conf. Ser. **278**, 012029 (2011).
13. G. Lutjering and J. C. Williams, "Titanium," 2nd Edition, Springer Berlin Heidelberg New York (2007).
14. F. Rosebury, "Handbook of electron tube and vacuum techniques," Addison-Wesley, Reading, Mass (1965).
15. Heat Transfer module User's Guide; COMSOL INC., USA, (2007)
16. I. E. Molodetsky, E. P. Vicenzi, E. L. Dreizin, and C. K. Law, "Phases of titanium combustion in air," Combust. Flame **112**(4), 522–532 (1998).
17. T. A. Andrzejak, E. Shafirovich, and A. Varma, ""On the Mechanisms of Titanium Particle Reactions in O_2/N_2 and O_2/Ar Atmospheres," Propellants, Explos., Pyrotech. **34**(1), 53–58 (2009).

#148605 - $15.00 USD Received 2 Jun 2011; revised 1 Jul 2011; accepted 1 Jul 2011; published 12 Jul 2011

1. Introduction

Micro-fabrication is the term used to describe the manufacture of structures on the micron-scale dimension. Ablation using short pulsed lasers (ns to fs) is one of the most common micro-fabrication techniques used for high precision drilling of micro-holes, cutting and patterning in metals and dielectrics [1]. It has been demonstrated that femtosecond pulses produce sharp borders with little or no thermal damage to the surround illumination volume due to the rapid energy deposition [2]. In contrast, nanosecond and even picosecond pulses produce thermal damage and reduce the quality of ablation [2–4]. Ablation and cutting can also be performed with high-power (~kW) CW lasers but considerable thermal damage to the surrounding illumination volume is produced. In CW ablation, the laser beam heats up and subsequently melt and, if power is enough, vaporize the material. Usually, the molten material is expelled from the cutting front by pressurized gas, which may also serve as a material removal-enhancer through chemical reactions [5]. To our knowledge, no high quality patterning has been demonstrated with CW low power lasers in thin films. On the other hand, it is well known that cavitation near a solid boundary may severely damage the substrate but not much attention has been given to this process as the damage seems to be a random one. Only few works have studied in detail the damage produced in short-pulsed or electrical-discharge induced-cavitation [6,7]. It was shown that multibubble cavitation creates a complicated pattern over metallic surfaces and therefore is not suitable for high-quality patterning applications.

In this work, we present novel results on the micro-hole fabrication on semi-transparent indium tin oxide (ITO) and metallic (titanium) thin films by means of two methods: erosion by thermocavitation and sublimation of titanium using CW low power lasers. There are two main advantages of CW low power as compared to pulsed systems: low cost and high quality Guassian beams. In addition, the mechanisms of ablation are of quite different nature, while in pulsed laser is ionization avalanche or multi-photon absorption, in CW laser linear absorption dominates. We show that by scanning the sample along the beam's focus, micron-sized resolution patterning can be achieved. The micro-holes can be employed as micrometer light sources for use in point-diffraction interferometers or spatial filters; in addition, micron-sized resolution patterning can be performed.

2. Experiment Description

Thermocavitation experiments were performed by focusing a CW near infrared laser (λ = 1064 nm) in a saturated solution of copper nitrate (13.78 g of $CuNO_4$ per 10 mL of water). The solution strongly absorbs at the laser wavelength ($\alpha = 135\ cm^{-1}$). The absorbed light heats the solution up to its critical limit, i.e., the temperature at which an explosive liquid-gas phase transition occurs. In the case of water, the critical limit is T_{CR} ~270-300 °C [8–10]. Around T_{CR}, the superheated water is explosively converted to vapor, producing a fast expanding bubble. The bubble eventually collapses, emitting a shock wave around its minimum radius. In a previous work, we showed that the bubbles are always in contact with the surface, taking a semispherical shape [11]. The target film is contained in a cell consisting of two glass plates separated by a spacer in the form of a circular pool of 1 cm diameter and 120 μm depth. A titanium thin film of 65 nm or a 150 nm thin film of ITO was deposited on the inside surface of the cell opposite to the entrance beam. The laser beam is TEM_{00} mode and focused down with a DIN achromatic oil-immersion 100x (NA = 1.25) microscope in order to produce the smallest spot size (~1 μm radius) on the target film. The absorption coefficient of the titanium film is α_{Ti}~$10^5\ cm^{-1}$ and α_{ITO} ~$10^3\ cm^{-1}$ for ITO at λ = 1064 nm. The maximum power at the lens' focus is ~20 mW and therefore an intensity of $0.6x10^6\ W/cm^2$. The number of cavitations depends on the deposited energy [11], so the laser's current was modulated with a digital pulse delay generator (SRS Mod. DG645) in order to produce a single cavitation event

#148605 - $15.00 USD Received 2 Jun 2011; revised 1 Jul 2011; accepted 1 Jul 2011; published 12 Jul 2011

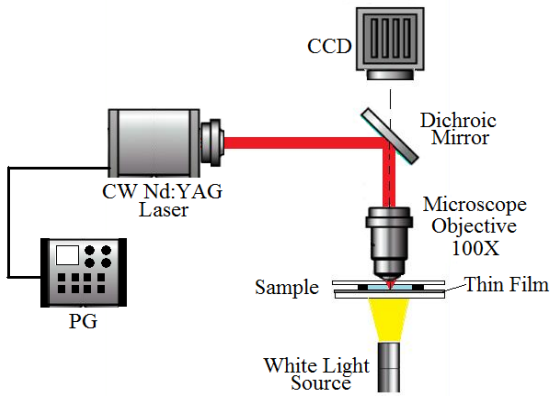

Fig. 1. Experimental set up for micro-hole fabrication. PG is pulse delay generator used to pulse the laser's current.

In order to monitor the damage to the thin films an incoherent light source was used to image the substrate's surface into a CCD camera (Fig. 1). Visible light transmitted by ITO films is very high so the damage can be easily seen, however, for titanium films light transmission is quite small and practically no light is detected on the camera. Once the titanium is removed, it appears as a bright spot on the CCD camera. For later image processing, the films were observed in more details using a TESCAN Scanning Electron Microscope SEM (Mod. Vega TS5136SB) and a Quesant Instrument Corporation Atomic Force Microscope AFM (Mod. QSCOPE-250). Since the bubbles are formed in contact with the entrance substrate, erosion is optimized [6,7]. In this work, erosion is produced on the opposite substrate, where the metallic/transparent film is deposited. Since the propagation distance is quite small, attenuation of the shockwave is expected to be negligible and damage should be optimum.

3. Results and Discussion

Figure 2 shows an array of micro-holes produced with the setup shown in Fig. 1. The laser's current was modulated with a square pulse whose width was chosen to produce a single cavitation. For a power of 5.7 mW at the microscope objective output and a pulse width of 180 µsec, the after mentioned condition was achieved. Two interesting features are worth to note: i) almost perfect micro-holes of ~5 µm in diameter are produced and ii) an extended and irregular damage around the micro-holes is observed.

The thickness of the copper nitrate solution film is 120 µm, so light absorption reduces the beam intensity to approximately 20% from its ~0.15 MW/cm^2 peak level (power 5.7 mW). The water is heated to its critical limit and cavitation bubbles are produced. When cavitation is produced, the full input beam intensity (0.15 MW/cm^2) reaches the thin film since attenuation by water vapor is negligible. The interface vapor-solution acts as a negative lens of variable focal length and thus defocusing the beam on the target film. The bubble works as a thermocavitation activated switch. The amplitude of the shockwave was measured to be ~1MPa for a ~300 µm bubble radius [11]. We found that the bubble radius and the shock wave amplitude, decreases linearly as the intensity increases [12]. For our current conditions, the amplitude of the shock wave is estimated to be ~0.1 MPa. A precise measurement of the shock wave amplitude is very difficult to perform due to the sample thickness and attenuation of the wave due to the cell's walls. Although this pressure seems small as compared to those produced with pulsed lasers (~GPa), it is highly localized and therefore it may exert considerable forces on the substrate. The shock waves emitted on the opposite face penetrate through the hole and detach the metal around it, as indicated in Fig. 2. Note that the micro-hole diameter is larger than the beam waist; this can be understood as a consequence of the

#148605 - $15.00 USD Received 2 Jun 2011; revised 1 Jul 2011; accepted 1 Jul 2011; published 12 Jul 2011

self-defocusing nature of absorbing solutions and the time-dependent negative lens produced by the bubble formation.

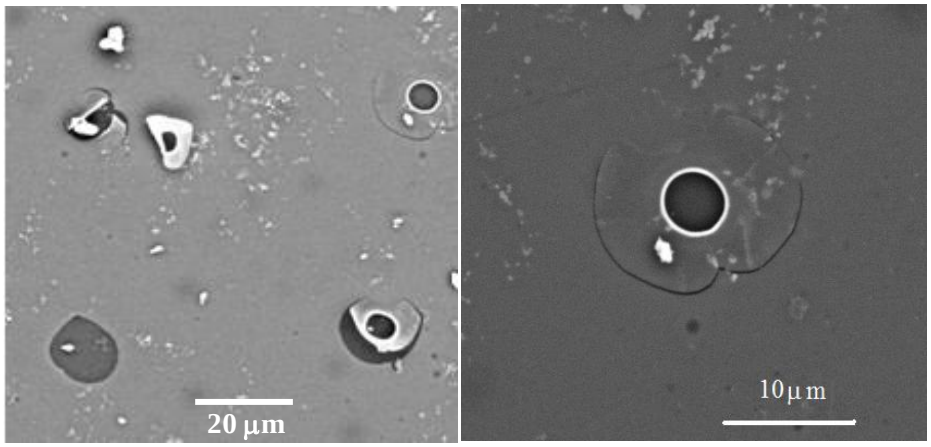

Fig. 2. SEM images of 65 nm titanium thin film. a) An array of four micro-holes produced by the focused beam on a cell filled with a saturated solution of copper nitrate salt; b) close up of the top right corner image.

Light absorption (α_{Ti}~10^5 cm^{-1}) at the metallic film may lead to considerable heating. Due to linear expansion, the film is expected to deform, taking a Gaussian-shaped bump and partially detaching it from the glass substrate, as clearly shown on the top right image of Fig. 2b. It may be reasonable to assume that the pressure wave produced at the collapse of the bubble may tear the bump apart and produce the circular holes; however, its borders are too symmetric to be attributed to shock waves. The combined action of the shockwave and the water counter jet produced on bubble collapse near a solid boundary [6] may also produce the holes, but once again, they are too symmetric and there is no indication of rupture on the borders, and no debris was found inside them. Finally, rupture of the Gaussian bump by radiation pressure can be ruled out for the same reasons.

When a metal is illuminated by a high power laser, the energy of the photons is absorbed by electrons and converted to heat, which in turns melts the metal, and if power is high enough, evaporates it. In particular, titanium strongly absorbs the near infrared light (α_{Ti}~10^5 cm^{-1} at λ = 1064 nm) and therefore substantial heating is expected. Titanium melts at 1668°C and boils at 3287°C [13]. When titanium is heated in air, it ignites at ~1200°C and in a rich-oxygen atmosphere it ignites at 600°C. Titanium sublimates at 1546°C in vacuum [14] but this temperature is expected to be a little higher in open air. In our experiments, we used a highly focused low power laser reaching a peak intensity of I_{peak} = 0.6x10^6 W/cm^2. One wonders if this intensity is capable of producing temperatures of thousand degrees at the microscope objective focus, such as to ignite, sublimate, melt or boil titanium. Due to the small heated volume, the high rate of energy deposition and thickness of the sample, direct temperature measurements are quite difficult. Thus, in order to estimate the titanium temperature caused by light absorption, we solved the time-dependent heat transfer equation suitable for thin conductive films [15]:

$$\rho d C_p \frac{\partial T}{\partial t} + d\nabla\cdot\left(-k\nabla T\right) = Q + h_a(T_{ext,a} - T) + h_g(T_{ext,g} - T) + \varepsilon_a\sigma(T_{amb,a}^4 - T^4) + \varepsilon_g\sigma(T_{amb,g}^4 - T^4), \quad (1)$$

where d is the film thickness, ρ is the titanium density, C_p is its heat capacity, T is the temperature, k is the titanium thermal conductivity,σ is the Stefan-Boltzmann constant and Q

#148605 - $15.00 USD Received 2 Jun 2011; revised 1 Jul 2011; accepted 1 Jul 2011; published 12 Jul 2011

is the heat source given by $Q = (I\alpha_{Ti})$, where I is the beam's intensity with Gaussian profile. The subscripts (a) and (g) refers to upwards (air) and downwards (glass) media surrounding the metal film; $h_{a,g}$ is the heat transfer coefficient, $T_{ext,a,g}$ is the corresponding external temperature, $\varepsilon_{a,g}$ is the surface emissivity and $T_{amb,a,g}$ is the ambient temperature. Almost all of these parameters are temperature-dependent and were obtained from the COMSOL´s materials/coefficient library [15]. Equation (1) takes into account the heat conduction and out-of-plane heat transfer. Since the metallic film is so thin (in our experiment d = 65 nm) it was assumed that the temperature through the film thickness was constant. The ambient temperature was taken as 20°C and $T_{amb} = T_{ext,u} = T_{ext,d}$ since no additional heat sources are considered. Solving Eq. (1) numerically, we obtained the temperature profile on the metallic film reached at the end of a square pulse (180 µs) of a highly focused laser beam. Figure 3 shows the radial profile of the temperature distribution. As expected, the peak temperature is reached at the same place where the intensity is the highest. Due to heat diffusion, the temperature profile is much broader than the beam spot. The simulation shows that depending on the beam power, the peak temperature above the boiling point of titanium is easily reached. Thus in principle, evaporation of titanium is possible and that would explain the fabrication of the micro-holes.

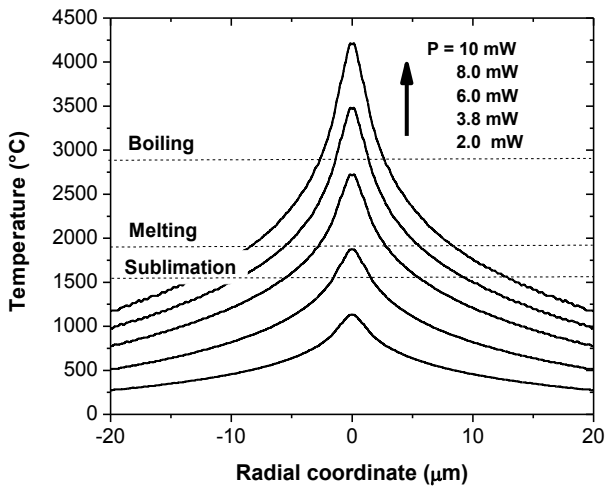

Fig. 3. Temperature profile at the titanium film for three different powers after 180 µs of illumination by highly focused laser beam.

One possible explanation of micro-hole formation is titanium boiling; however, if boiling is achieved there must be a melting zone on regions where the intensity decreased such that the temperature is below the boiling point. We found no evidence of melting on the micro-holes borders. Oxidation requires melting of titanium in order to allow oxygen diffusion into the metal and formation of the Ti-O-N phase reported in previous reports [16,17]. We believe that the rapid heating of the titanium film limits the oxygen diffusion limiting the formation of TiO2 or TiN and therefore hinders the explosion of voids of N, i.e holes will not be generated. In the oxidation process, it is common to observe light emission but we found no such evidence, which indicates oxidation is minimized.

We believe that titanium sublimation is the mechanism responsible for micro-hole formation. As we mentioned earlier, titanium sublimates at 1546°C in vacuum [14] but this temperature is expected to be a little higher in open air but smaller than the melting temperature. Due to a lack of information of this data, we take 1546°C as the sublimation temperature. Titanium is commonly used as a getter in high-vacuum pump systems due to its

#148605 - $15.00 USD Received 2 Jun 2011; revised 1 Jul 2011; accepted 1 Jul 2011; published 12 Jul 2011

high reactivity. Titanium sublimation pumps operate by depositing a film of titanium (from a heat resistant filament) over a surface cooled to liquid nitrogen temperature. Active gases (hydrogen, oxygen, and nitrogen) react to form non-volatile compounds such as titanium dioxide. Thus, in principle, one can achieve submicrometer resolution by an adequate control of the laser beam power, as indicated by our simulations (Fig. 3). In addition, we should be able to decrease the diameter of the holes in air since defocusing will no longer be an issue.

This is shown in Fig. 4 where micro-holes are drilled under different conditions. Figure 4a shows a 600 nm diameter micro-hole generated with a power of 5.7 mW and a 180 µs single-pulse. Figure 4b shows a 800 nm diameter micro-hole produced with a burst of three, 1 ms-long laser pulses, each followed by a 1 ms pause, while Fig. 4c corresponds to 320 1ms-long pulses with 1 ms between pulses. The bottom of the figure shows the corresponding 3D images obtained from an AFM, indicating the high quality of the holes.

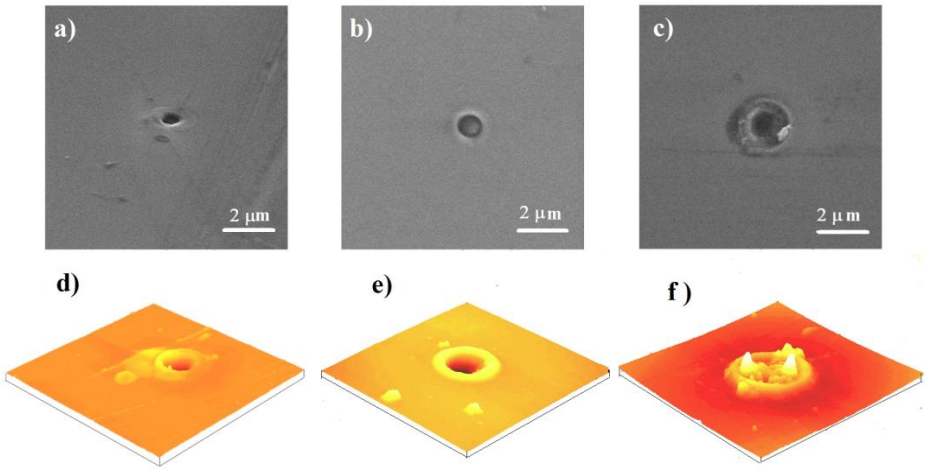

Fig. 4. The top row has SEM images while the bottom row has AFM images of the corresponding micro-holes in titanium thin film produced by the CW laser in air. The micro-holes are produced with a) 1, b) 3 and c) 320 pulses.

In all three cases, we can clearly observe quite symmetric holes. For the single pulse case, the micro-hole diameter is ~600 nm diameter. As the number of pulses increases (central image), the Gaussian bump extends over a larger region due to linear expansion of titanium as heat diffusion plays a more important role. In the extreme case of 320 pulses, a micro-hole of ~1.2 µm diameter is produced. Notice that the hole's diameter does not increase much with the number of pulses, but the thermal damage is obvious. The peaks observed in the AFM images may be an artifact of the microscope, as there is an abrupt change in height around the borders and there is no evidence of such peaks on the SEM images. So, in order to produce even smaller holes, shorter pulses of higher power are required as predicted by simulations.

#148605 - $15.00 USD Received 2 Jun 2011; revised 1 Jul 2011; accepted 1 Jul 2011; published 12 Jul 2011

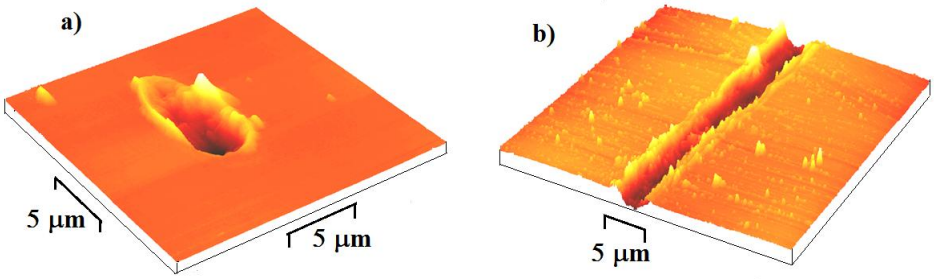

Fig. 5. Damage due to cavitation in saturated solution of copper nitrate. Damage produced by single cavitation (a) and a line produced by many cavitations when the sample is scanned (b). Both images were taken with an atomic force microscope (AFM).

Although the amplitude of the emitted shock waves on collapse of the bubbles is smaller than those produced by pulsed lasers, they can still produce severe damage on dielectric films or transparent conductor films such as ITO. The absorption coefficient of ITO (α_{ITO} ~10^3 cm^{-1}) is relative small compared to titanium, so the temperature rise is expected to be modest but high enough to superheat the water in contact with ITO. Our simulations indicate that temperatures as high as 300°C can easily be achieved and therefore cavitation is possible. The shock waves are capable of damaging ITO as indicated in Fig. 5a. By scanning the focal point on top of the ITO film it is possible to generate lines of 5 µm width (Fig. 5b). By using a computer controlled 2D translation stage, it may be possible to perform lithography on ITO, eliminating the need of photolithography. In order to prove that cavitation is responsible for the damage, we perform the same experiment in air. Even at the largest available power, no damage to the film was observed. The holes here are not as symmetric as those observed in titanium, indicating that cavitation cannot be used for high resolution lithography but it may be enough for micron size resolution patterning.

4. Conclusions

We have shown that thermocavitation can produce micro-holes on titanium and ITO thin films deposited on glass substrates. Almost perfect micro-holes of 600 nm were fabricated in titanium due to sublimation, indicating that temperatures over 1546°C can be achieved by using only ~6 mW power from a CW laser. Since the material removal is due to a direct phase change to the vapor, the cut quality is extremely high with clean edges whose diameter can be controlled with the beam power. On the contrary, cavitation in substrates with small absorbing can produce damage with much lower quality, however, it is possible perform micron-size lithography in ITO. The micro-holes can be used as micrometer light sources or for spatial filters or submicron sized photolithography in metals using low power CW lasers.

Acknowledgments

The authors would like to thank Dr. Walfre Franco from Wellman Center for Photomedicine at Harvard Medical School for technical support with the simulation.